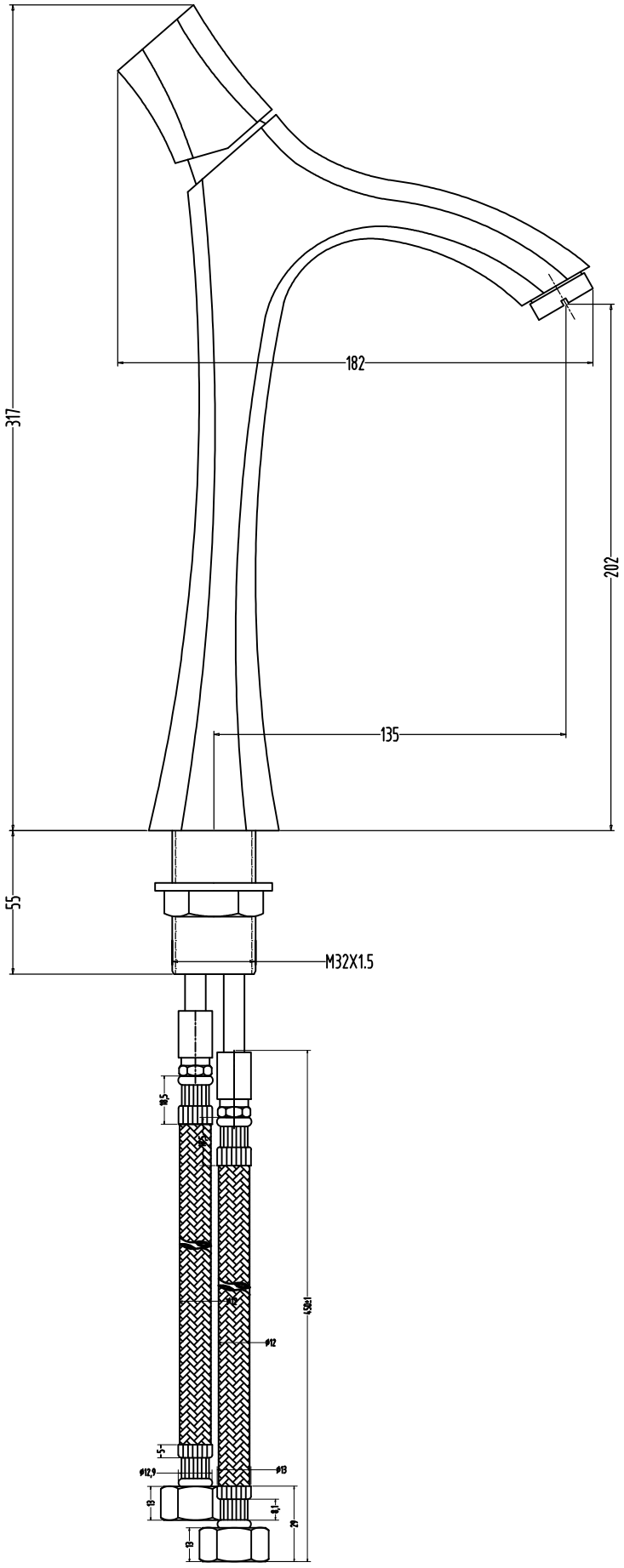

ARMADA F260014
S/L BASIN MIXER TALL