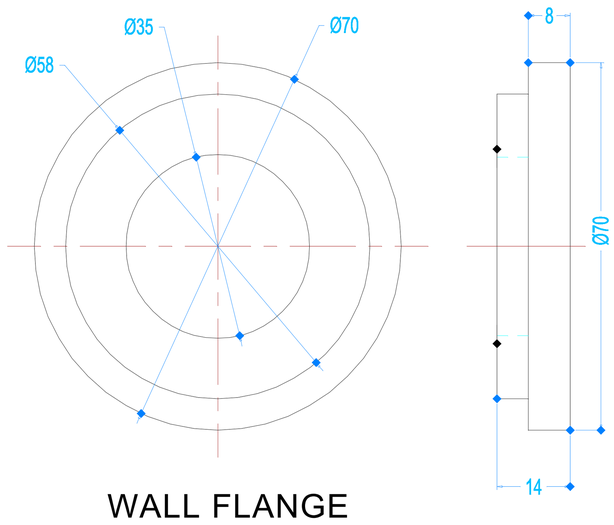

WALL FLANGE

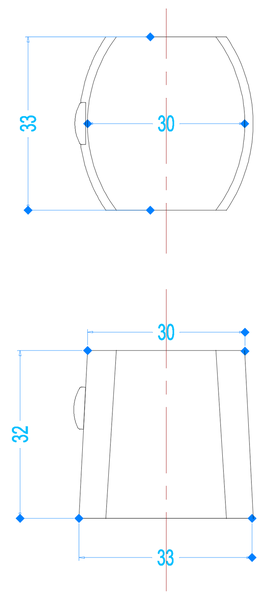

HAMDLE

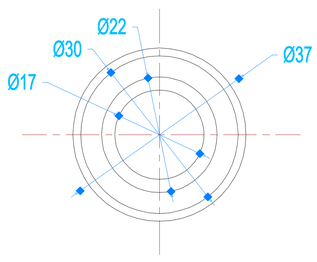

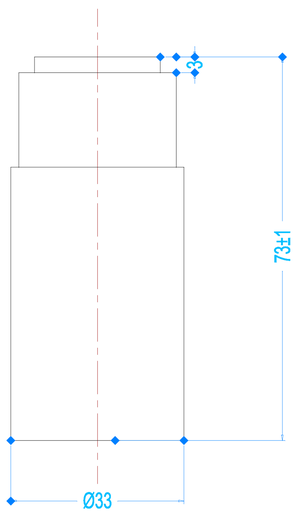

SLEEVE

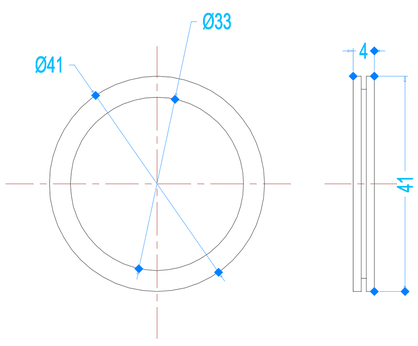

FLANGE WASHER

S.NO	QTY.	DISCRIPTION	MATERIAL	WEIGHT PER PIECE
01	01	HANDLE	ZINC	
02	01	FLANGE WASHER	NBR	
03	01	WALL FLANGE	BRASS	
04	01	SLEEVE	BRASS	

ALL DIMENSIONS ARE IN MM

SCALE : NTS

SHEET SIZE: A4

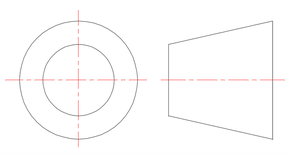

HSIL LIMITED

TIKRI TRADING DIVISION P.O. TIKRI KALAN,

DELHI -ROHTAK ROAD ,DELHI 110041

TITLE: ARMADA FINISHED DRAWING

DESCRIPTION: C.S.C WITH WF EXPOSED KIT

PRODUCT CAT. NO.:	F260018
PRODUCT SAP CODE:	
PRODUCT RAW MATERIAL:	Brass
UPDATED ON:	18.05.2016
PRODUCT APPROVED WEIGHT WITHOUT ACCESSORIES:	

REVISION CODE	REASON FOR CHANGE	REVISION DATE	DRAWN BY	CHECKED BY	VERIFY BY	APPROVED BY
			ENGINEER	ENGINEER	MANAGER	AGM

This Drawing remain the property of HSIL ltd.TTD,It must not,even in part,be reproduced or may available
to un Athorised person without express concerned of HSIL Ltd. TTD and may be used only for agreed purposed