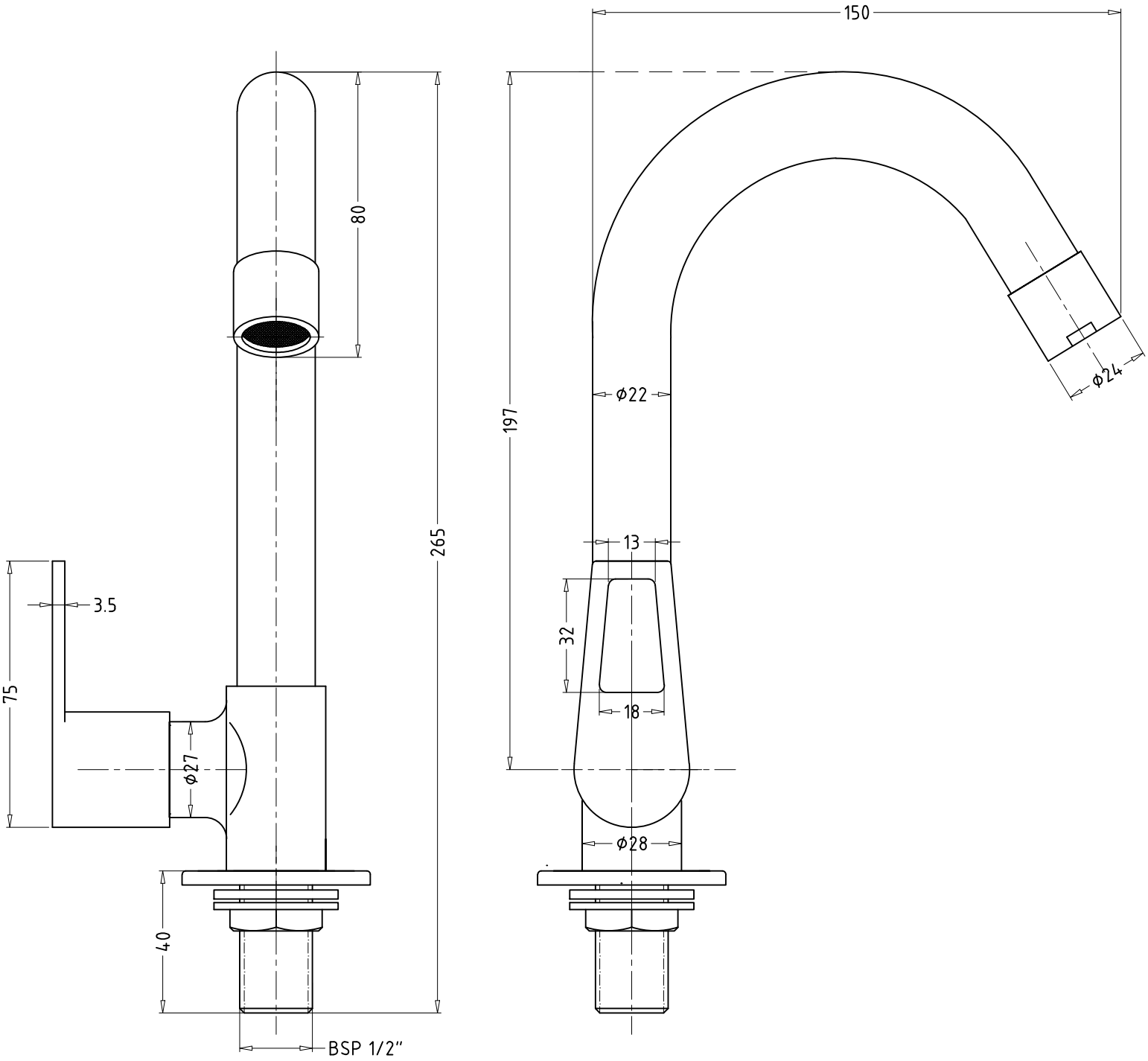

ASPIRO: 570013
SWAN NECK TAP WITH LEFT HAND KNOB