Flora_Half Pedestal Basin

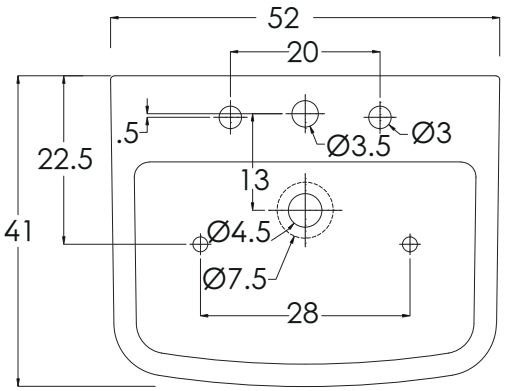

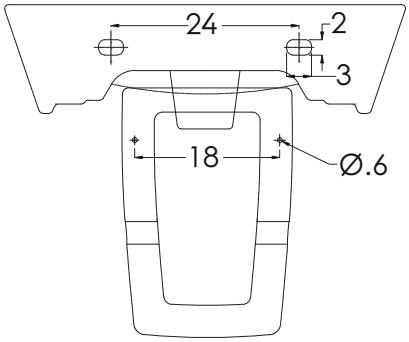

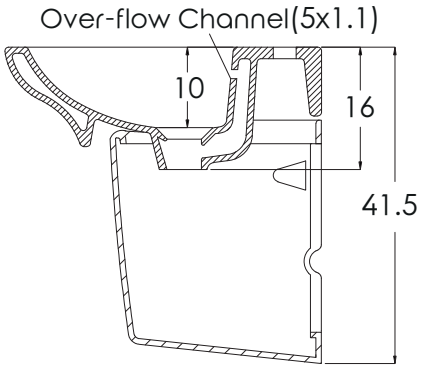

hindware	
CATALOGUE NO:	10114 WB / 91115 Ped.
PRODUCT:	Half Pedestal Basin
SIZE:	52 cm X 41 cm

All dimensions are in cm